TWIN WHEEL CASTER (THREADED BOLT TYPE) FAU-55-NS, N

RoHS compliant | LOAD CAPACITY 70 kg 154 lbs

FAU-55-N
(w/o Brake)

FAU-55-NS
(w/ Brake)

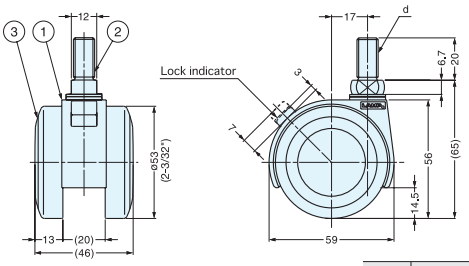

- Wheels are covered with elastomer (rubber) for smooth and quiet movement, by absorbing vibration.
- Light & durable aluminum body construction.

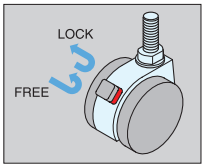

No.	Part Name	Material	Finish
①	Body	Aluminum Alloy	Silver
②	Threaded Bolt	Steel	Yellow Zinc Chromate
③	Wheel	Polyamide,Elastomer	Black

Item No.	d	Load Capacity (kg)	Weight (g)	Box (pcs)	Carton (pcs)
FAU-55-NS	W3/8-16UNC	70 (154 lbs)	155	4	72
FAU-55-N	W3/8-16UNC	70 (154 lbs)	151		

CASTER (PLATE TYPE) PLN50P

RoHS compliant | LOAD CAPACITY 80 kg 176 lbs | NO SCREW

PLN50PCR

PLN50PBL

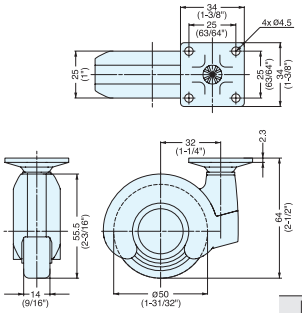

- Sleek contemporary design, available in Black (BL) or Chrome (CR)
- Ball-bearing type caster for exceptionally smooth movement.

Part Name	Material	Finish
Body	Zinc Alloy	BL=Black, CR=Chrome
Plate	Steel	Yellow Zinc Chromate
Wheel	Polyamide	Black

Item No.	Load Capacity (kg)	Weight (g)	Box (pcs)	Carton (pcs)
PLN50PBL	80 (176 lbs)	220	1	28
PLN50PCR				

CASTER (THREADED BOLT TYPE) PLN50N10

RoHS compliant | LOAD CAPACITY 80 kg 176 lbs

PLN50N10CR

PLN50N10BL

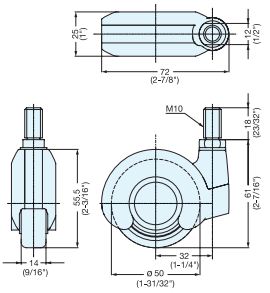

- Sleek contemporary design, available in Black (BL) or Chrome (CR)
- Ball-bearing type caster for exceptionally smooth movement.

Part Name	Material	Finish
Body	Zinc Alloy	BL=Black, CR=Chrome
Plate	Steel	Yellow Zinc Chromate
Wheel	Polyamide	Black

Item No.	Load Capacity (kg)	Weight (g)	Box (pcs)	Carton (pcs)
PLN50N10BL	80 (176 lbs)	203	1	40
PLN50N10CR				