SOFT-DOWN STAY

Lapcon L=R STEEL

SDS-200, SDS-201, SDS-210

Features

- For top-opening flap doors.
- Built-in damper causes flap to close gently preventing slamming.
- Non-handed.
- Built-in catch holds flap in fully open position.
- 3 types available:
  - -SDS-200: Opens 70°, works with single axis hinges.
  - -SDS-201: Opens 70°, works with multi axes hinges.
  - -SDS-210: Opens 105°, can be used with either single or multi axes hinges.

Video Link

Torque

- With 1 stay
  Torque = 3.43 - 4.9 N·m (35 - 50 kgf·cm)
- With 2 stays, the torque will be doubled.

Parts Included

- Mounting plate
- Countersunk head tapping screw 3.5×14

Sold Separately

Face plate for glass doors SDS-50G (P.522)

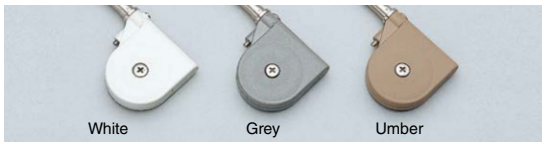

Mounting plate SDS-A for SDS-210

Mounting plate SDS-B for SDS-200 and SDS-201

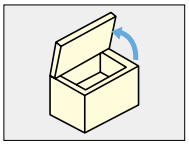

Mounting Plate

SDS-200, SDS-201

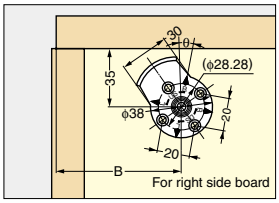

SDS-210

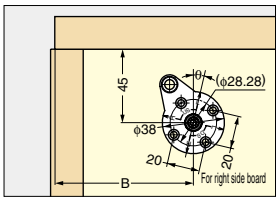

Installation SDS-200 and SDS-201 (Opening Angle 70˚)

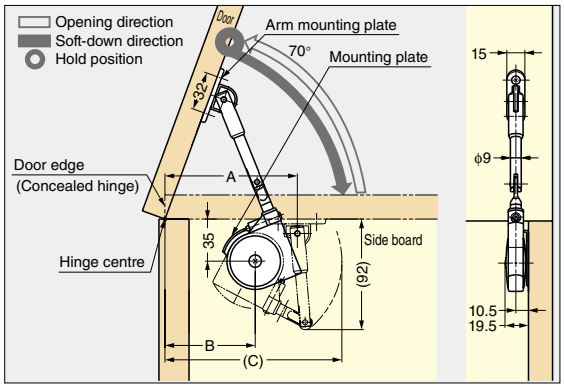

Installation SDS-210 (Opening Angle 105˚)

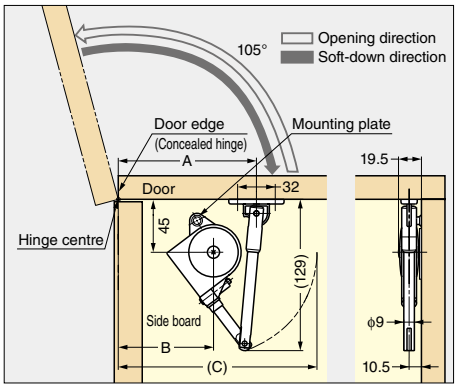

Full Overlay

Item Name	A	B	C	θ
SDS-200	110	75	147	(0˚)
SDS-201	109	74	146	(0˚)
SDS-210	117.5	81	169	(5˚)
	123.5	87	175	(12˚)

Inset

Item Name	A	B	C	θ
SDS-200	98.5	63.5	135	(10˚)
SDS-201	114	79	151	(0˚)
SDS-210	108.3	70	157.3	(15˚)

Incase door thickness 20 mm.

Note: For opening angle of 80˚, 90˚ and 100˚, please use SDS-C301N.
For installation details, please contact your local dealer.

Material	Finish/Colour
ABS/Steel	Nickel/White (W) Grey (G) Umber (U)

Body

Item Code	Item Name	Opening Angle	Hinge	Torque Moment/piece	Weight	Box	Carton
180-100-268	SDS-200-W	70˚	Butt Hinge	3.43 - 4.9 N·m (35 - 50 kgf·cm)	153 g	20 pcs	100 pcs
180-100-269	SDS-200-G				153 g	20 pcs	100 pcs
180-100-270	SDS-200-U				153 g	20 pcs	100 pcs
180-100-271	SDS-201-W		Concealed Hinge		153 g	20 pcs	100 pcs
180-100-272	SDS-201-G				153 g	20 pcs	100 pcs
180-100-273	SDS-201-U				153 g	20 pcs	100 pcs
180-100-274	SDS-210-W	105˚	Butt Hinge/ Concealed Hinge		159 g	20 pcs	100 pcs
180-100-275	SDS-210-G				159 g	20 pcs	100 pcs
180-100-276	SDS-210-U				159 g	20 pcs	100 pcs

SDS Face Plate (Sold Separately)

Item Code	Item Name	Material	Finish/Colour	Weight	Box	Carton
180-100-260	SDS-50G-CR	Zinc Alloy (ZDC)/ABS	Chrome/Black	25 g	50 pcs	200 pcs
180-928-046	SDS-50G-BL	Zinc Alloy (ZDC)/ABS	Black/Black	25 g	50 pcs	200 pcs